PHY-112 | Principles of Physics-2

Akiful Islam (AZW)
Spring 2025 | Class #12

Department of Mathematics & Natural Sciences

BRAC UNIVERSITY
Inspiring Excellence

Enter Electric (DC) Circuits

BRAC UNIVERSITY
Inspiring Excellence

What is an Electric Circuit?

A method to extract energy using a controlled motion of charges

A *circuit diagram* is a logical picture of what is connected to what.

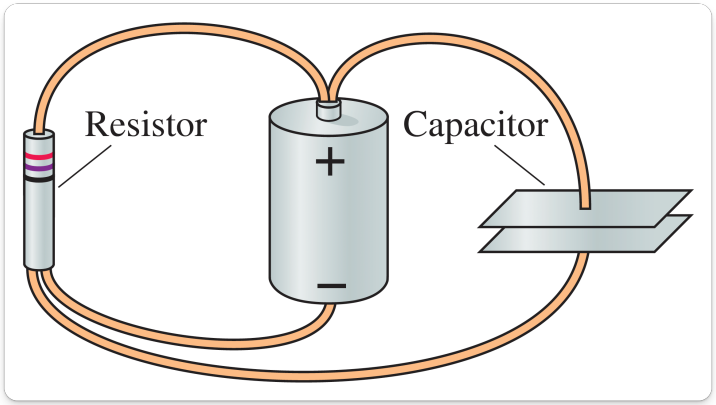

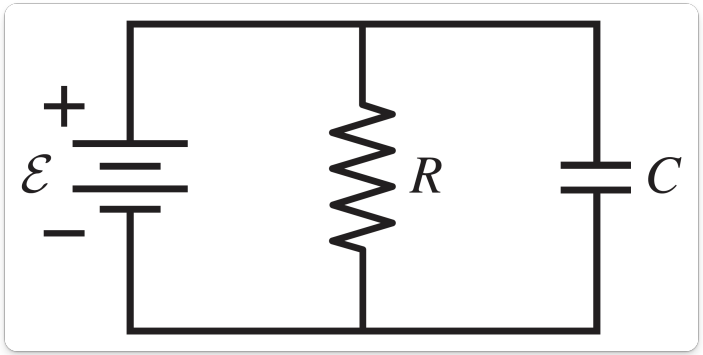

Basic Circuit Elements

Only what we need for this course

Resistor

Ideal Battery

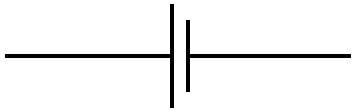

Real Battery

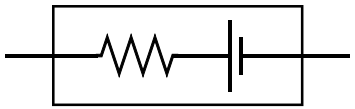

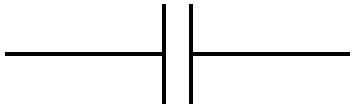

Capacitor

Switch

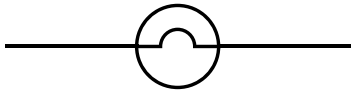

Bulb

Ideal v/s Real Batteries

Real things have a 'cost'

For an ideal battery, $\Delta V_{\text{terminal}} = \mathcal{E}$.

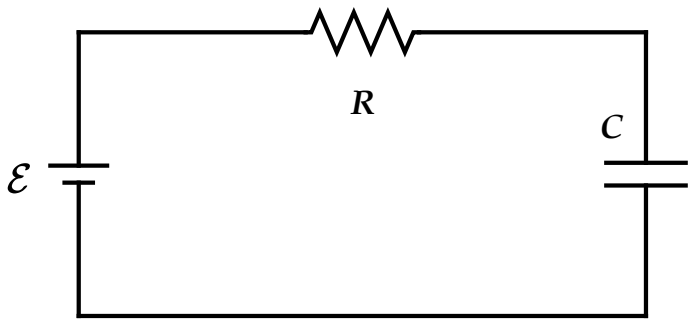

Ideal Battery

Real Battery

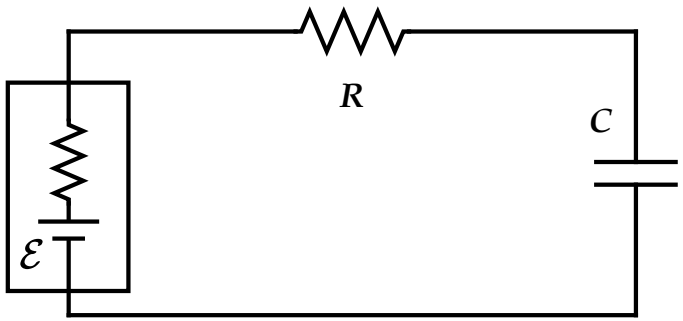

For a real battery, $\Delta V_{\text{terminal}} = \mathcal{E} - Ir$.

Note: V_{terminal} is what the external circuit receives from the battery, ideal or real.

Incepting Ideas (1)

Hint: Look out for the internal resistance

Q: A wire of resistance 5.0 Ω is connected to a battery whose emf is 2.0 V and whose internal resistance is 1.0 Ω. (a) Calculate the current active in the circuit, and (b) find the terminal voltage of the battery.

Q2: A 6 Ω flashlight bulb is powered by a 3 V battery with an internal resistance of 1 Ω. What is the current through the bulb and the terminal voltage of the battery?

Homework Practice Problem: Try it Yourself

Q: A solar cell generates a potential difference of 0.10 V when a 500 Ω resistor is connected across it, and a potential difference of 0.15 V when a 1000 Ω resistor is substituted. What are the (a) internal resistance and (b) emf of the solar cell?

Hint: Generate 2 equations with the given parameters and solve for *r*.

Kirchhoff's Two Rules for Circuits

Kirchhoff's 1st Rule: Current Rule or Junction Rule

Applicable due to Conservation of Electric Charge

Because **electric charge is conserved**, the total current into the junction must equal the total current leaving the junction. That is,

$$\sum I_{\text{in}} = \sum I_{\text{out}}$$

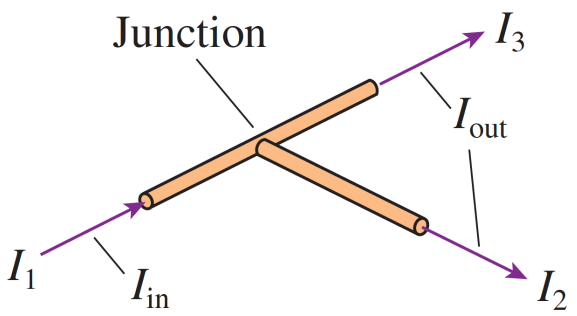

Junction law: $I_1 = I_2 + I_3$

Incepting Ideas (2)

Hint: Find the paths of decreasing potential

Q: What is the magnitude of the current in the wire to the right of the junction? Do the charged particles in this wire move to the right or to the left?

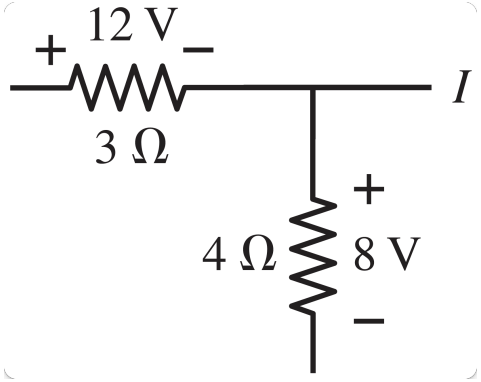

Kirchhoff's 2ND Rule: Voltage Rule or Loop Rule
Applicable due to Conservation of Energy

Because **energy is conserved**, a charge that moves around a closed path has $\Delta U_{\text{elec}} = 0$. The algebraic sum of all potential differences sum to zero in a circuit.

$$\Delta V_{\text{loop}} = \sum_i (\Delta V)_i = 0$$

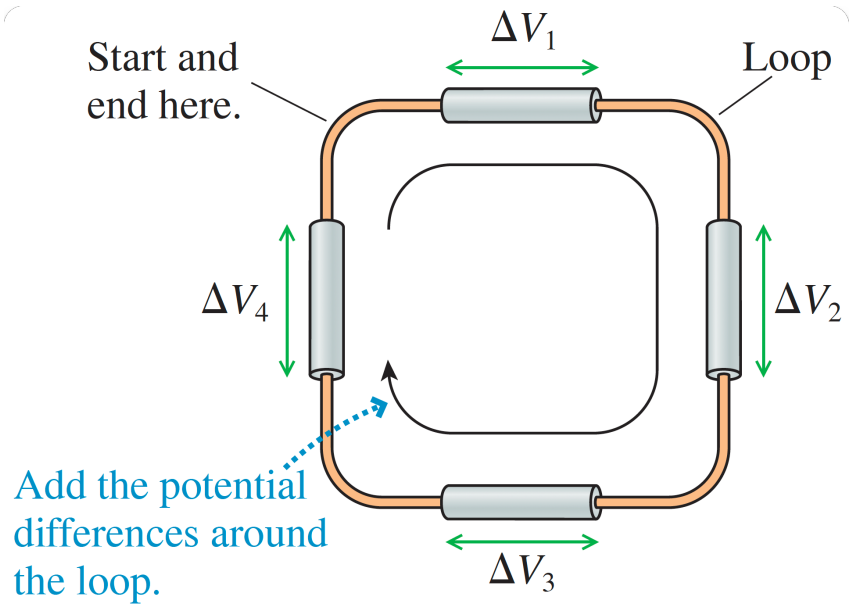

Loop law: $\Delta V_1 + \Delta V_2 + \Delta V_3 + \Delta V_4 = 0$

How to use Kirchhoff's 2ND Rule

Every other convention is a derivative of this one

- **Draw a circuit diagram**: Label all known and unknown quantities.
- **Assign a direction to the current**: Draw and label a current arrow I to show your choice.
- ***Travel* around the loop**: Choose any direction.
  Resistance Rule: For a move through resistance in the direction of the current, the change in potential is $-IR$; in the opposite direction, it is $+IR$.

  EMF Rule: For a move through an ideal EMF device in the direction of the EMF arrow ($-$ to $+$), the change in potential is $+\mathcal{E}$; in the opposite direction, it is $-\mathcal{E}$.
- **Apply the loop law**: $\sum(\Delta V_i) = 0$.

Incepting Ideas (3): Single Loop Circuits

Hint: Pick a convention and stick to it

Q: Find the current and potential differences across each resistor.

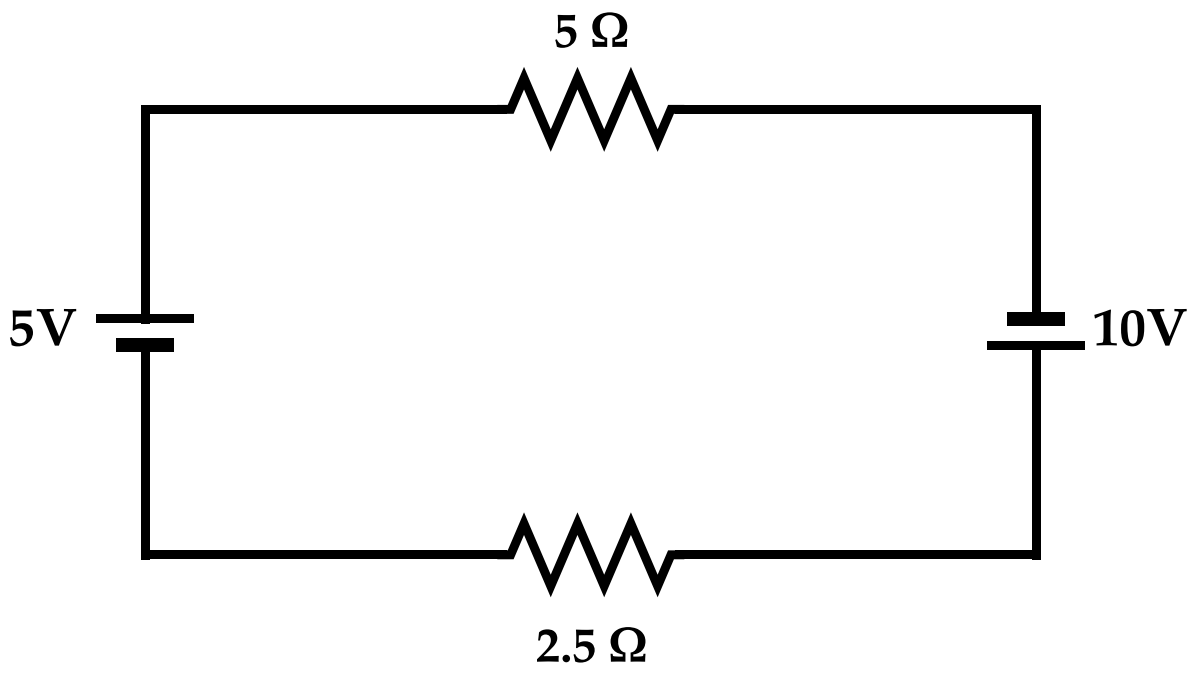

Incepting Ideas (4): Multi Loop Circuits

Hint: Apply KVL twice

Q: The batteries shown in the circuit have negligibly small internal resistances. Find the current through (a) the 30.0 Ω resistor; (b) the 20.0 Ω resistor; (c) the 10.0 V battery.

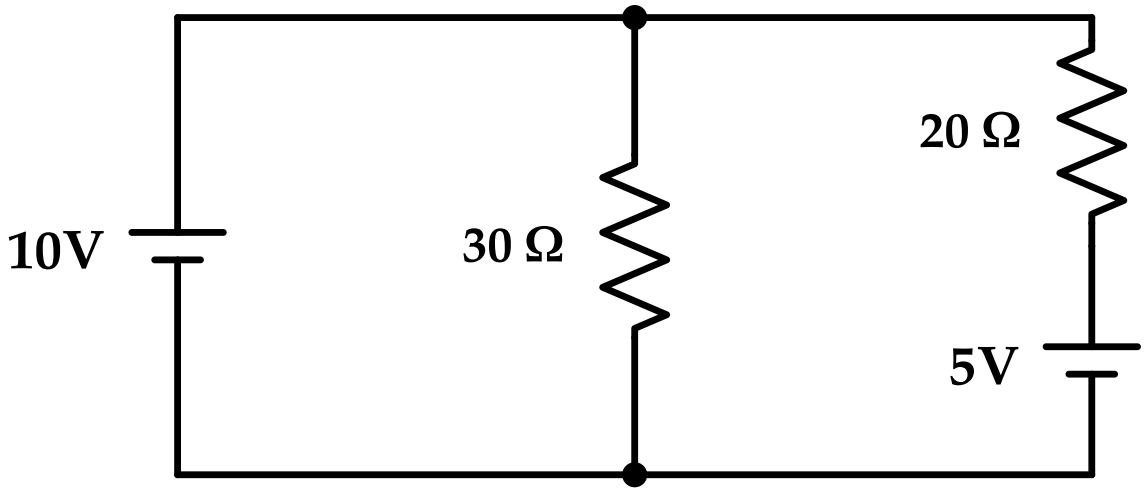

Incepting Ideas (5): Multi Loop Circuits

Hint: Apply KVL twice

Q: Find out (a) the current and (b) the potential difference across each resistor.

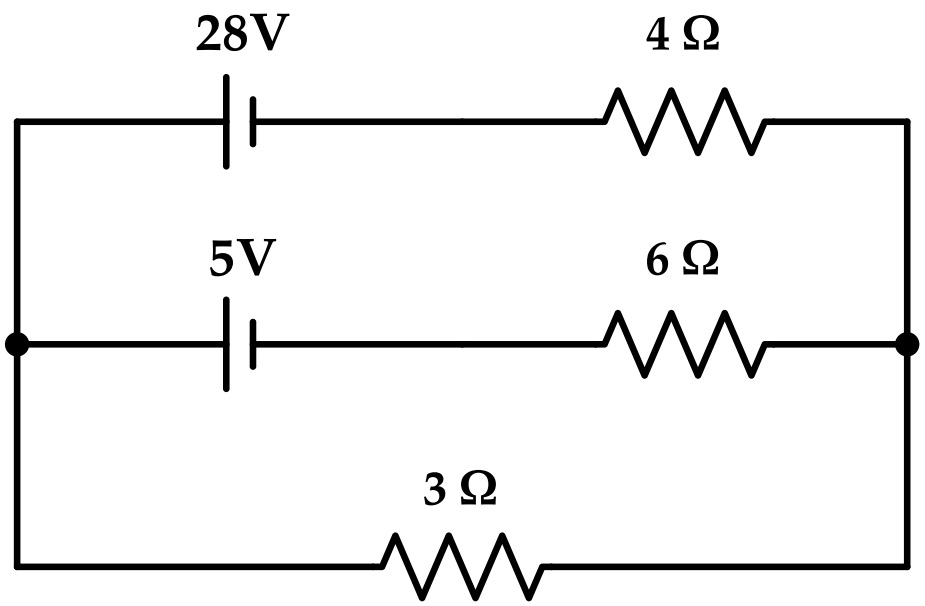

Incepting Ideas (6): Multi Loop Circuits

Hint: Pick a convention and stick to it

Q: A 12 V power supply with unknown internal resistance r is connected to a run-down rechargeable battery with unknown emf $\mathcal{E}$ and internal resistance 1 Ω and to an indicator light bulb of resistance 3 Ω carrying a current of 2 A. The current through the run-down battery is 1 A in the direction shown. Find r, E, and the current I through the power supply.

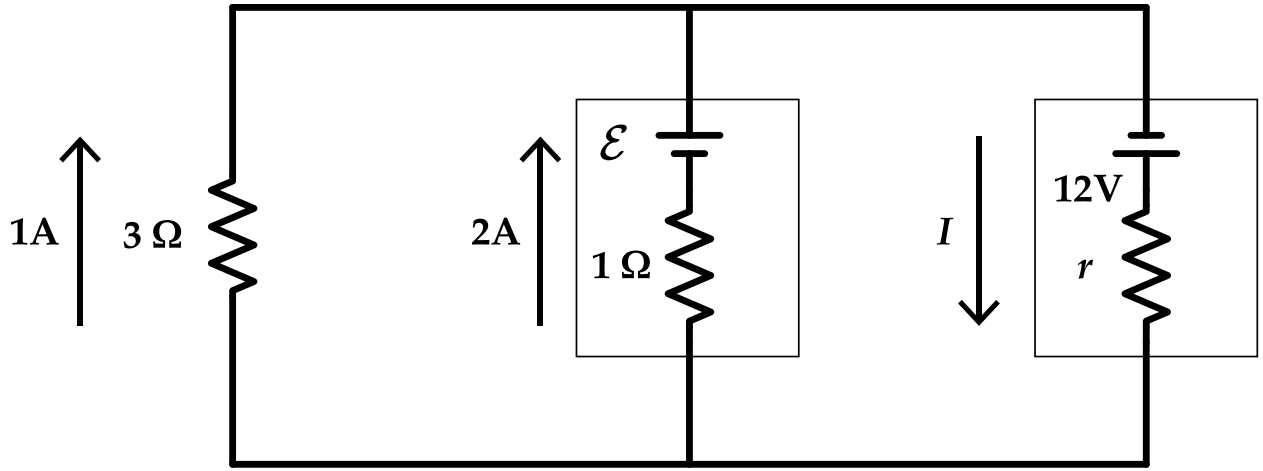

Resistors in Series and Parallel

Combinations of Resistors: Series

Try this at home

The voltage across each resistor is not the same. The total voltage across the series combination equals the sum of the voltages across each resistor.

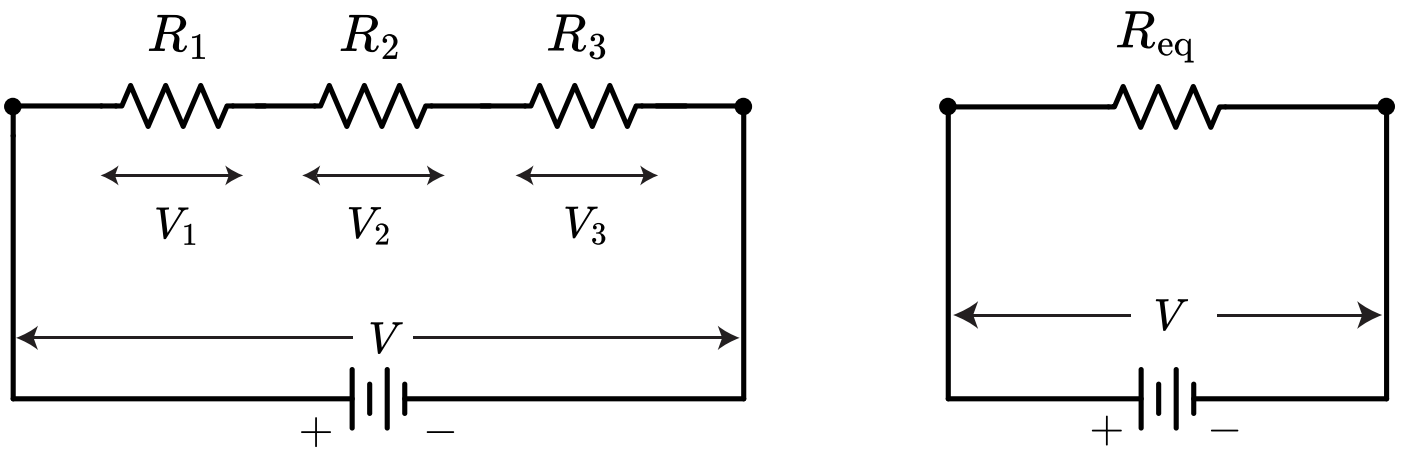

$$R_{\text{eq}} = R_1 + R_2 + R_3 = \sum_i^n R_i$$

Combinations of Resistors: Parallel

Try this at home

The voltage across each resistor is the same. The total current through the parallel combination is the sum of the currents through each individual resistor.

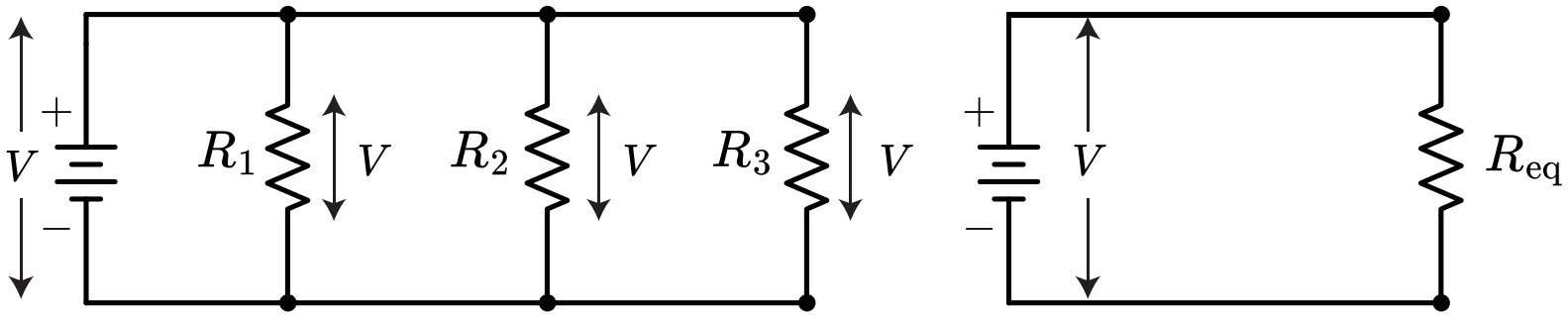

$$\frac{1}{R_{\text{eq}}} = \frac{1}{R_1} + \frac{1}{R_2} + \frac{1}{R_3} = \sum_i^n \frac{1}{R_i}$$

Incepting Ideas (7)

Hint: Find the equivalent resistance first

Q: Find the (a) current of the battery supplies, (b) currents, and (c) potential differences across each resistor.

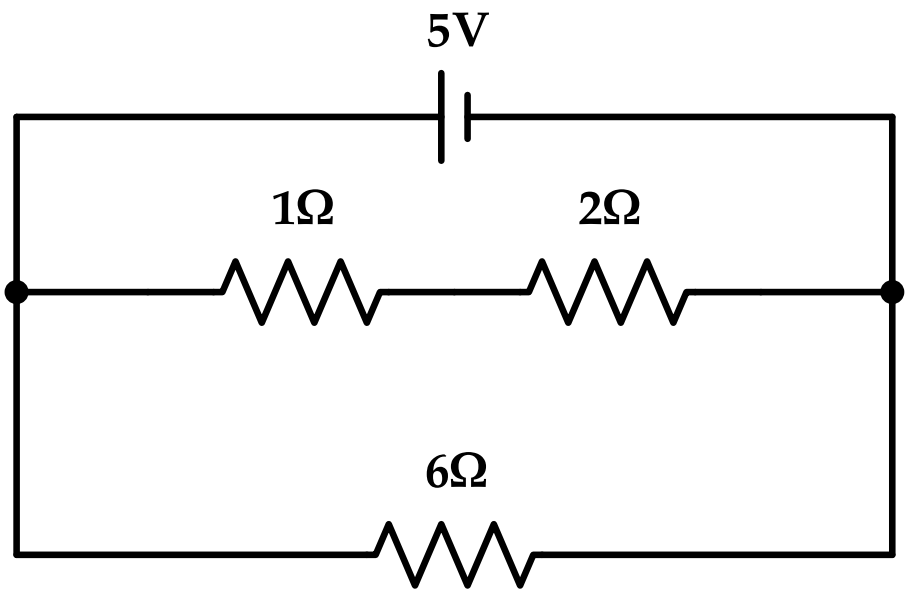

Energy and Power in Electric Circuits

BRAC UNIVERSITY
Inspiring Excellence

How is Energy transformed in Circuits

It begins with the power source

Energy Dissipation in Resistors:

$$E_{\text{chemical}} \rightarrow U \rightarrow K \rightarrow E_{\text{thermal}}$$

The battery's chemical energy is transferred to the thermal energy of the resistors, raising their temperature.

Energy exchanged per unit time is **Power**.

Provide Energy

Using a battery

Power delivered by the EMF:

$$P_{\text{battery}} = \frac{\Delta U}{\Delta t} = \frac{\Delta q}{\Delta t}\mathcal{E} = I\mathcal{E}.$$

It is measured in J s^{-1}, or commonly, W.

For example, a 120 V battery that generates 2 A of current is delivering 240 W of power to the circuit.

Extract Energy
Across output load

Power dissipation through Resistors:

$$P_R = \frac{\Delta U}{\Delta t} = \frac{\Delta q}{\Delta t} V_R = I \Delta V_R = I^2 R = \frac{(\Delta V)^2}{R}.$$

It is also measured in J s^{-1}, or commonly, W.

Incepting Ideas (8)

Hint: Use either of the three formulae for power

Q: Rank in order, from largest to smallest, the powers P_A to P_D dissipated in resistors A to D.

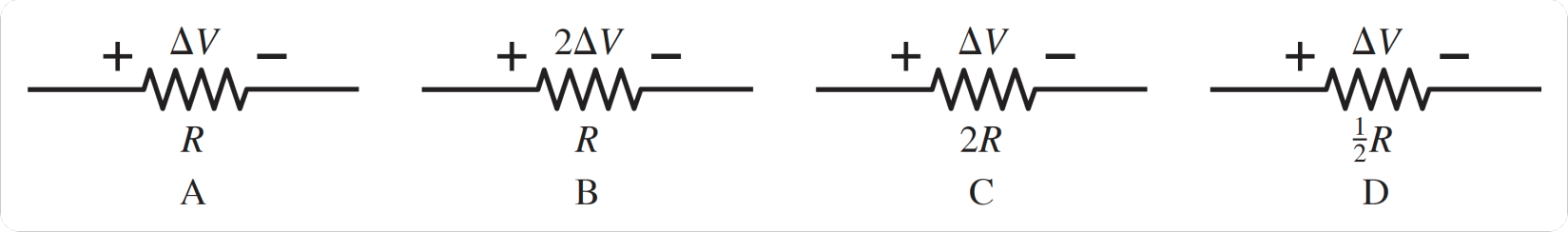

Incepting Ideas (9)

Hint: There are two power dissipations here

Q: A 6 Ω flashlight bulb is powered by a 3 V battery with an internal resistance of 1 Ω. What are the power dissipation of the bulb?

With great power...

...comes massive electricity bills!

Electric Bills are measured in terms of Kilowatt hours (kW h).

$$E_{\text{thermal}} = P_R \Delta t.$$

Incepting Ideas (10)

Hint: Practice! Practice! Practice!

Some Problems to Practice at Home on DC Circuits

Q-26.6 p-897, **Example** 26.1, p-875, 26.2, p-876, 26.10, p-884, 26.11, p-885 | Young-Freedman
Exercise Problem 26.2, 26.11, p-898, 26.13, 26.14, 26.20, p-899, 26.25, p-900, 26.56, p-901 | YF
Checkpoint 1, p-775, 2, p-777, 3, p-779 **Sample Problem** 27.01, p-780, 27.02, p-784 | Resnick-Halliday
Exercise Problem 5, p-794, 27.-1 - 1, 2, p-795, 16, 17, 20, p-796 | RH

That is it for today!